LiquoSystems®
Wir regeln Zukunft!

EN

iFerm Nano Terminal

Operating instructions

2018-01

© LiquoSystems GmbH, 74366 Kirchheim/Neckar, Germany

Copyright & imprint

These operating instructions apply exclusively to *iFerm Nano Terminal.* They were written, checked and approved in German. If there are differences in terms of content in translated versions, the information in the German version takes precedence. If you come across any discrepancies, please contact our customer service, see *"9.6 Customer service" on page 48*.

All rights reserved, including translation into other languages. These operating instructions or parts thereof may not be copied, translated or otherwise used in any way without the written permission of LiquoSystems GmbH.

Brand names

The *iFerm Nano* series devices are products of LiquoSystems GmbH. As a rule, all companies and products named in this manual are registered trademarks of the respective companies.

Graphics

Images, graphics and screenshots in these instructions can contain optional functions and are for illustrative purposes only.

LiquoSystems®
Wir regeln Zukunft!

LiquoSystems GmbH

Wilhelmstraße 45 | 74366 Kirchheim/Neckar, Germany
Tel.: +49 7143 891050 | Fax: +49 7143 92868
info@liquosystems.de | www.liquosystems.de

EN

Contents

1 Introduction 5
1.1 Proper use 5
1.2 Prior knowledge 5
1.3 Notes about the operating instructions 5
2 Safety notices 6
3 Product overview 7
3.1 Scope of delivery 7
3.1.1 Opening iFerm Nano Terminal 8
3.1.2 Standard components 8
3.2 Optional accessories 9
3.3 Connections and control elements 10
4 Installation 11
4.1 Wall mounting 11
4.2 Cable connection 11
4.2.1 Cable specification and connection instructions 11
4.2.1.1 230 V AC power connection 12
4.2.1.2 Data bus 12
4.2.1.3 Insulation 12
4.2.2 Routing the cable into the housing 12
4.2.3 Connecting the strands 13
4.2.4 Bus terminating resistor installation 13
4.2.5 Applications 14
4.2.5.4 Data bus termination 14
4.2.5.5 Data bus passage 15
4.2.6 Attaching the connecting cable 15
4.2.7 Connecting the Ethernet cable 16
5 Operation 17
5.1 Notes on operation 17
5.1.1 Concepts and illustrations 17
5.1.2 General operating instructions 17
5.1.3 Buttons 18
5.1.4 Enter letters and numbers 18
5.1.5 Display 19
5.2 Protected areas 19
5.3 Commissioning and subsequent integration of further controllers 20
5.4 Device overview 24
5.4.1 Device main view 25
5.4.2 Other device settings 27

6 Special functions* 28
6.1 Valve maintenance* 28
6.2 Graph display* 29
6.3 Collective switches* 30
6.4 Groupings* 32
6.4.1 Circuit management* 33
6.5 Chiller* 34
6.6 Web browser* 36
6.6.1 Activating the Web browser 36
6.7 Access via the Web browser of a PC 37
7 Global settings menu 38
7.1 Global settings 39
7.2 Global device operation 40
8 Maintenance and care 42
8.1 Cleaning 42
8.1.1 Housing, display and connecting cables 42
9 Appendix 43
9.1 Default settings 43
9.1.1 Resetting the controller and terminal 44
9.2 Technical data 45
9.3 Troubleshooting 45
9.4 Disposal 47
9.5 Declaration of conformity 47
9.6 Customer service 48
9.7 ID overview 49

EN

1 Introduction

These operating instructions provide you with information about all technical and safety-relevant aspects that you must be familiar with for using *iFerm Nano Terminal*.

➡ Read the operating instructions in full before operating the unit, and also use them for the purpose of instructing all users.

1.1 Proper use

iFerm Nano Terminal is the central control unit for monitoring and controlling the process temperatures in beverage production in conjunction with *iFerm Nano* control systems. With *iFerm Nano Terminal*, you can keep a constant eye on up to 30 *iFerm Nano* series controllers and control them with ease.

iFerm Nano Terminal can also be used for temperature monitoring in processes such as filtration, bottling, tartrate stabilisation, room temperature control and stock cooling. Use for other purposes is only permissible if the manufacturer's written approval has been obtained for the actual situation. Special functions such as monitoring of heating processes are generally possible, but for safety reasons should be discussed with the manufacturer.

Operation and configuration are done via the touch screen of the *iFerm Nano Terminal*. As an option, you can also incorporate it into your network and operate it via the Web browser of a PC.

1.2 Prior knowledge

In the operating instructions, users are defined as all persons who are involved in the installation and operation of the *iFerm Nano Terminal*. Users must be at least 16 years of age. They must have read and understood the operating instructions and must be able to follow all notices and instructions.

The operating instructions are intended for persons with experience in handling comparable measuring instruments and systems. In particular, basic knowledge of beverage production is required.

1.3 Notes about the operating instructions

The following typographical elements are used in the operating instructions in order to notify you of possible hazards or particular information:

⚠	***DANGER!*** **Identifies notices of the Danger hazard level.** Indicates possible hazards that can result in injury or death if ignored.
⚠	**Attention!** **Identifies notices of the Attention hazard level.** Indicates possible hazards that can result in material damage if ignored.
i	Information **Indicates more detailed information.** Points out alternative actions, further information sources or helpful tips.

Position information

All stated positions (left, right, front, back, top, bottom etc.) relate to an observer looking at the display of *iFerm Nano Terminal* from the front. The connecting cable is therefore at the bottom, the display in front.

Special functions

These instructions describe both the basic functions and optional extensions of the *iFerm Nano Terminal*. The special functions not included in the basic configuration are identified in the instructions by asterisks (*).

If you wish to add one or more of these functions to your *iFerm Nano Terminal*, please contact our customer service, see *"9.6 Customer service" on page 48*.

2 Safety notices

- Read the operating instructions carefully and obey all safety notices. Material damage resulting from ignoring the safety notices is not covered by any warranty.
- Whenever you use *iFerm Nano Terminal*, follow the laws that apply at the place of use, particularly the general safety and accident prevention regulations. If in doubt, these take precedence over the directions in the operating instructions.
- *iFerm Nano Terminal* is operated with 230 V AC, 50/60 Hz alternating voltage. The power supply must be properly connected and then checked and approved by a qualified electrician. There is a risk of electric shock if the connection is faulty!
- Extreme temperatures caused by heat build-ups, frost, UV light, direct sunlight etc. can cause irreparable damage. Always maintain the specified ambient temperatures, see *"9.2 Technical data" on page 45*.
- *iFerm Nano Terminal* is protected against water jets (IP65). However, avoid intensive contact with liquids (e.g. high-pressure cleaners).
- Lay cables so that they do not present a trip hazard and away from sharp-edged objects. Ensure sufficient strain relief and kink protection.
- Clean the *iFerm Nano Terminal* with a soft damp cloth. Do not use any aggressive, scouring cleaning agents or cleaning agents containing solvents.
- Do not perform any repairs on *iFerm Nano Terminal*. Follow the instructions in the chapter *"8 Maintenance and care" on page 42*.

EN

3 Product overview

With *iFerm Nano Terminal* you can monitor adherence to process temperatures in up to 30 tanks. Alternatively, you can also monitor room temperatures, heat exchangers etc. You configure the terminal directly via the integrated touch screen or, optionally, also via the Web browser of a PC in your network.

Attention!
Since electrical connections must also be made for the installation, this must be done by a suitably trained expert. If in doubt, contact our customer service, see *"9.6 Customer service" on page 48*.

3.1 Scope of delivery

The package contains the following articles:

Quantity	Description
1	*iFerm Nano Terminal* with integrated touch screen and preinstalled cable screw connections. Please note that corresponding cables are required for connecting to the power mains and data network.
1	Operating instructions
1	Accessory bag with the standard components (bus terminating resistor, brackets for wall mounting, seal for network cable).
1	List with passwords

- Check the package content immediately to make sure it is complete.
- Also follow the instructions in the subsequent chapters informing you about the type and number of the supplied components.

Attention!
Contact our customer service immediately if parts are missing or if you find any damage, see *"9.6 Customer service" on page 48*.

- Dispose of all packaging materials in accordance with the disposal regulations that apply in your region.

3.1.1 Opening iFerm Nano Terminal

You must open the *iFerm Nano Terminal* in order to check that the scope of delivery is complete. To do this, use a medium-sized slotted screwdriver (not supplied):

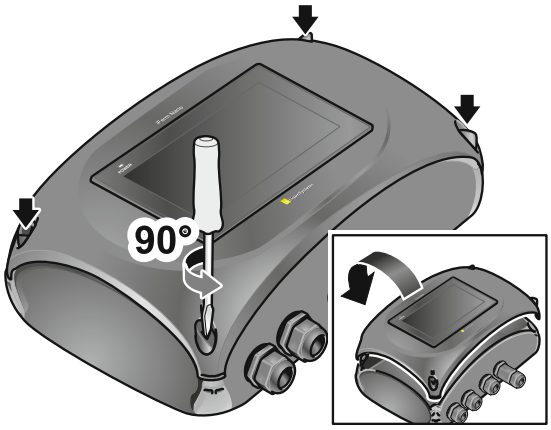

- Open the quick-release fasteners in the housing cover with a quarter turn to the left.
- Lift off the housing cover and carefully place it down behind the housing:
  - Use a soft underlay to protect the display when you place it down.
  - When lifting it off, make sure that you do not damage the cable connections of the display.
- Place all components on a clear and flat surface.

- For further assembly, it can be helpful to completely separate the housing cover from the housing. To do this you can unfasten the plug connections on the inside of the display:
  - Undo the plug lock with a slotted screwdriver.
  - Pull both plugs off the power connection and off the COM2 port of the display.
  - If necessary, disconnect the Ethernet cable from the LAN port of the display. When unfastening the plugs, make sure that you do not break off the latching tabs (press down the latching tab).

3.1.2 Standard components

The following components are included as standard in the *iFerm Nano Terminal* scope of delivery:

Item	Brief description
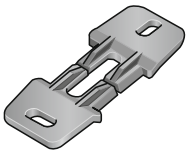	2 x 2 brackets with holes for wall mounting; can be plugged onto the rear of the housing
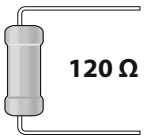	1 x 120 Ω bus terminating resistor; terminates the free cable end of the data bus network
	1 x Rubber seal; must be used with a thin network cable

EN

3.2 Optional accessories

The accessories listed here enable you to extend *iFerm Nano Terminal* and to optimally adapt to your system technology. Details of the available versions can be found in our current catalogue at: https://liquosystems.de/downloads

Item	Brief description
iFerm Nano Tank 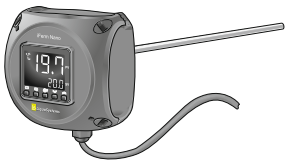	With *iFerm Nano Tank* you measure the process temperature via the integrated temperature probe directly on the tank. You set a target temperature that is permanently compared with the actual temperature. Every relevant deviation results in an adjustment of the connected valve that controls the flow to the heat exchanger in the tank.
iFerm Nano Top	*iFerm Nano Top* was designed for permanent installation at the place of use. Connection to the temperature probe, valve, power and data bus is done via the infrastructure. When the special functions **Collective switches** and **Chiller** are used, you require *iFerm Nano Top* as the control unit to switch switches.
iFerm Nano Switch	Used in conjunction with the *Collective switch** option to request a cooling or heating medium and to signal a collective alarm. A toggle switch is used to select the operating modes *Automatic*, *Off* and *On*; the switching contact is potential-free. If necessary, 1 *iFerm Nano Switch* must be used for each collective switch. *iFerm Nano Switch* is available in three different LED colours, used as standard for the following signalling: ● The blue LED indicator signals cooling requirement. ● The orange LED indicator signals heating requirement. ● The red LED indicator signals a collective alarm (flashing).
iFerm Nano Solo Bus 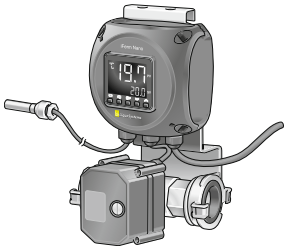	*iFerm Nano Solo* is designed for mobile use for measuring and controlling the process temperatures. Fully equipped with valve, power connecting cable and temperature probe, thus also allowing spontaneous start-up if no other infrastructure is available at the place of use. **Attention!** *iFerm Nano Solo* must not be operated in *Auto* mode, as this can cause unwanted control performance (e.g. cooling when hot water is connected).

Item	Brief description
iFerm Nano Classic 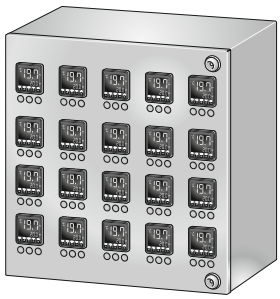	Control cabinet with 10, 20 or 30 controllers
iFerm Nano Kit	Unit with 10 controllers for replacing or retrofitting the following types of control cabinets: AFC, EFC, GTR, GTX

3.3 Connections and control elements

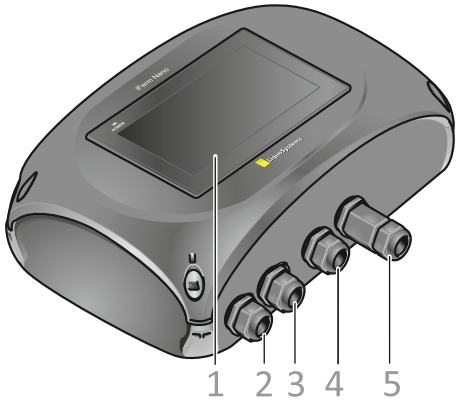

Pos.	Brief description
1	Display with touch screen
2	Cable screw connection for data bus 1
3	Cable screw connection for data bus 2
4	Cable screw connection for power connecting cable
5	Cable screw connection for Ethernet cable

EN

4 Installation

4.1 Wall mounting

The two supplied brackets allow safe mounting of the *iFerm Nano Terminal* on walls or pillars. As delivered, the brackets are connected to each other in pairs.

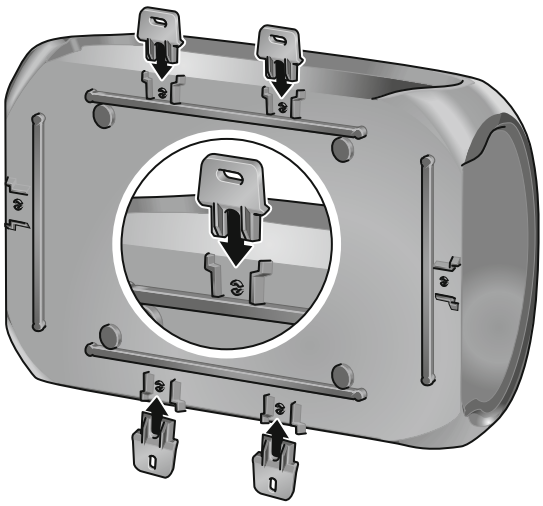

- Break the connected brackets into 2 parts at the predetermined breaking point.
- Push the brackets into two holders opposite each other on the rear of the housing. They engage noticeably when slight pressure is applied to them.

> **Info**
> You need to pull very firmly on a bracket in order to unlock it.

- Prepare the installation location for wall mounting. The horizontal spacing between the mounted brackets is 100 mm, and the vertical spacing is 260 mm.
- Use suitable fastening material (screws, plugs etc.) in order to install *iFerm Nano Terminal* securely.

4.2 Cable connection

> ***DANGER!***
> Carry out work on the terminals only when they have been isolated from the mains power.
> Before you open the housing, always disconnect from the mains any terminal boxes that have been connected.

> **Attention!**
> A short circuit can destroy the connected devices. Whenever you work on the electrical connection, make sure it has been isolated from the mains power.

4.2.1 Cable specification and connection instructions

> **Attention!**
> Read and follow the instructions below before you select and connect the required cables.

4.2.1.1 230 V AC power connection

Fuse

The power connection of *iFerm Nano Terminal* is protected against short circuits.

The fuse holder for the glass tube fuse used is integrated inside the casing in the terminal block of the 230 V AC connection. A glass tube fuse with the triggering characteristic *slow blow* is used, tripping when 800 mA is exceeded.

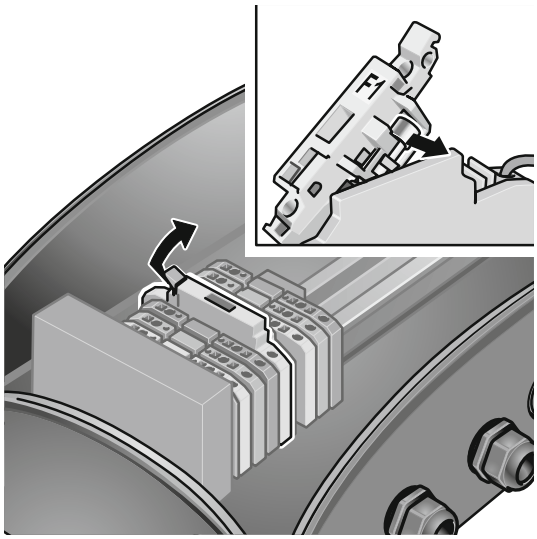

The glass tube fuse must be replaced after it has tripped:

- Open the fuse holder by flipping it upwards. The fuse holder contains a spare fuse.

> **Information**
> Use the spare fuse located at the top in the fuse holder and replace it immediately with another spare 800 mA fuse.

- Remove the previous fuse from the fuse holder and replace it with the spare fuse.
- Close the fuse holder.

4.2.1.2 Data bus

If you are not using the bus cable available from LiquoSystems, make sure that this is suitable and approved for the communication protocol *Modbus*.

4.2.1.3 Insulation

Stripped strand ends must not be longer than approximately 10 mm. They must always be protected with wire end ferrules. Exposed strand ends must be shortened and properly insulated.

The stripped shield of the bus cable must not be laid bare, it must be properly insulated with a shrink-on sleeve.

4.2.2 Routing the cable into the housing

> **Attention!**
> Only use cables with a diameter of 5 – 13 mm. Otherwise, the seal of the cable screw connection will not be effective.

- Loosen the union nut of the cable screw connection sufficiently to allow the cable to be pushed through easily.
- Strip the required length of the cable: The cable sheath should project so far into the inside of the housing that the free strands can be readily laid to the contact point.

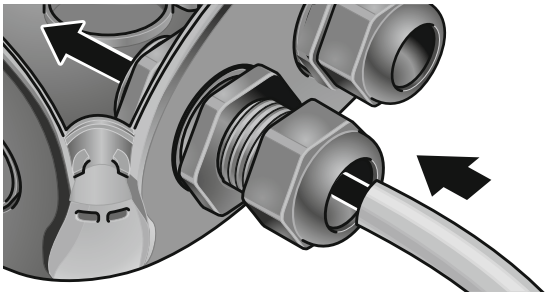

- Route the cable through the loosened cable screw connection and into the housing.
- Secure the cable against pulling when the cable sheath projects far enough into the housing:
  - Tighten the union nut hand-tight.
  - Remember that the cable should remain easy to rotate until the strands are connected.

4.2.3 Connecting the strands

Attention!

- Follow the recommendations in the chapter *"4.2.5 Applications" on page 14*.
- Makes sure that the stripped strand ends are max. 10 mm long.
- Always protect the strand ends with wire end ferrules before you connect them.

In the terminal of *iFerm Nano Terminal*, the individual contact points are unlocked with a slotted screwdriver.

- Insert the screwdriver into one of the square openings and and tilt it slightly towards the centre of the terminal in order to open contact point sufficiently.
- Push the strand end all the way into the corresponding round opening.

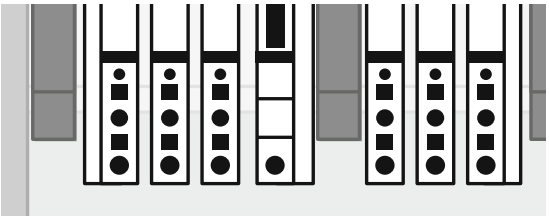

- Pull out the screwdriver and check whether the strand is secure in the terminal.
- Repeat this procedure for all the required strands.

4.2.4 Bus terminating resistor installation

Each end of a data bus line must be terminated by a 120 Ω bus terminating resistor. For this, both connections of the resistor are, like the strand ends of a cable, routed into a terminal.

The bus terminating resistor is already connected when the unit is delivered. However, this is only required if *iFerm Nano Terminal* is installed at the end of the data bus line, see *"4.2.5.4 Data bus termination" on page 14*. Otherwise you must remove the bus terminating resistor in order to connect the second bus cable at this location. You then connect the resistor to the other, free end of the data bus line.

4.2.5 Applications

The example graphics show the cable routing schematically as a plan view. The following comparison is intended to show how the schematic representation should be interpreted:

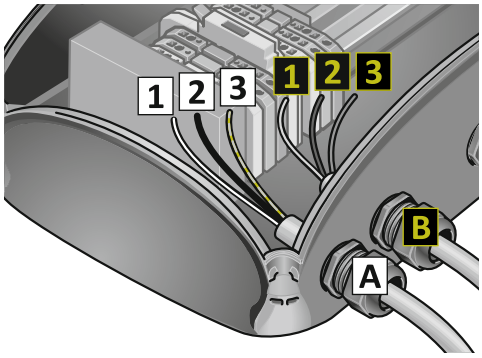

↔

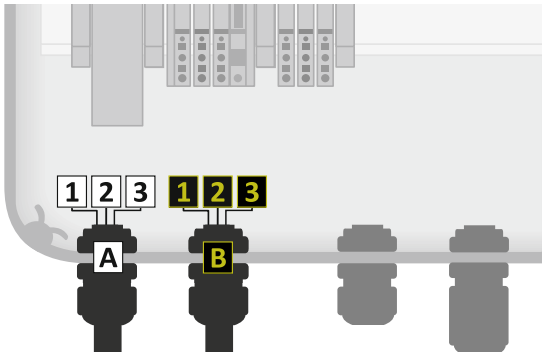

When making the cable connections, pay attention to the locations recommended in the examples for routing the cables and the installation instructions in the preceding chapters.

4.2.5.4 Data bus termination

iFerm Nano Terminal is connected at one end of the data bus line. The following cables and a bus terminating resistor that terminates the data bus are connected:

A **Power cable**

- **1** **L:** Phase (brown or black)
- **2** **N:** Neutral conductor (blue)
- **3** **PE:** Protective conductor (green-yellow)

B **Data bus (input)**

- **1** Modbus RS485 A
- **2** Modbus RS485 B
- **3** Modbus shield

C **Bus terminating resistor (120 Ω)**

(Any connection direction can be selected.)

- **1** Connection 1
- **2** Connection 2

Terminal assignment

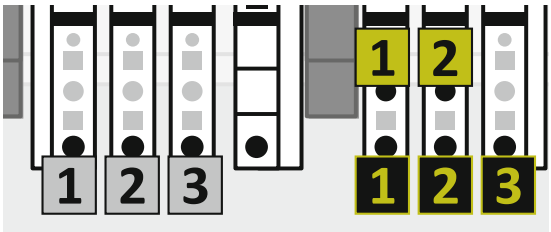

Cable connections

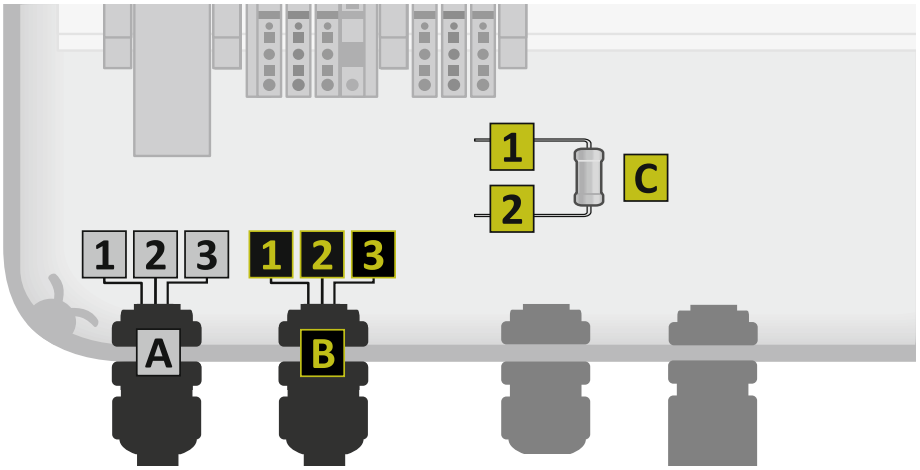

EN

4.2.5.5 Data bus passage

iFerm Nano Terminal is not connected at the end but at any desired position in a data bus line. The bus terminating resistor installed at the factory must be removed if necessary and installed at the other end of the bus. The following cables are connected:

A Power cable

- 1 **L:** Phase (brown or black)
- 2 **N:** Neutral conductor (blue)
- 3 **PE:** Protective conductor (green-yellow)

B Data bus (input)

- 1 Modbus RS485 A
- 2 Modbus RS485 B
- 3 Modbus shield

C Data bus (output)

- 1 Modbus RS485 A
- 2 Modbus RS485 B
- 3 Modbus shield

Terminal assignment

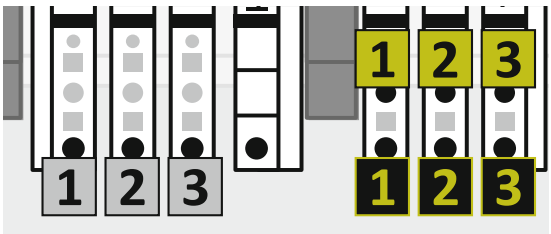

Cable connections

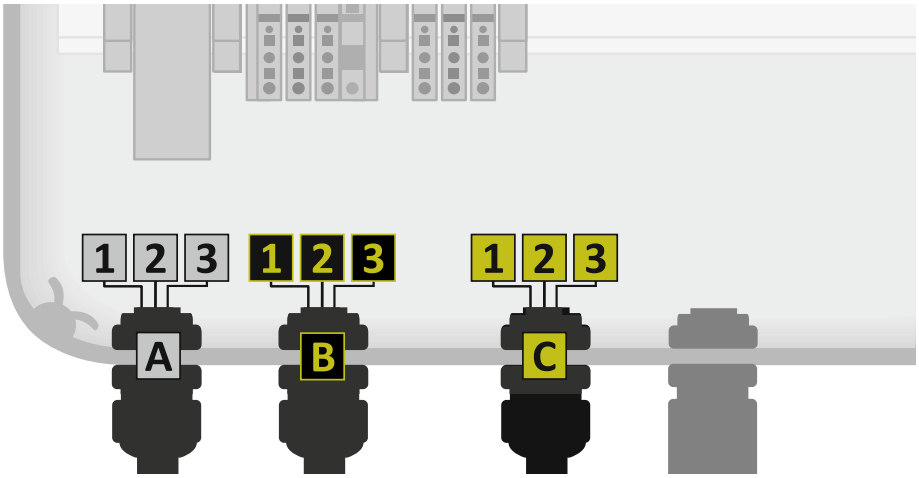

4.2.6 Attaching the connecting cable

- Check that the connected strands are secure before you complete the installation work and close the *iFerm Nano Terminal*.
- Securely tighten all cable screw connections on the inside and outside in order to ensure strain relief and no leaks.

Information

Even if you are not immediately integrating *iFerm Nano Terminal* into your network or connecting it to a PC, you should make the device's internal Ethernet connection straight away. This means that later on you only have to insert an Ethernet cable into the plug of the cable screw connection without having to open the device again.

- When you are fitting the housing cover, connect the short Ethernet cable in the device to the Ethernet socket in the display. When doing so, take care above all not to break off the plug's latching tab when releasing the plug (press down the latching tab).
- Close the housing and secure it with the quick-release fasteners.

Attention!

If you open *iFerm Nano Terminal* again later, you must detach the Ethernet cable in the device (when doing so, press down the plug's latching tab so that it does not break off).

4.2.7 Connecting the Ethernet cable

Requirement

- During installation you have connected the short Ethernet cable in the device to the connection in the housing cover. If you have not yet made the connection, you must do this first, see chapter *"4.2.6 Attaching the connecting cable" on page 15*.

Information

The standard IP address of *iFerm Nano Terminal* is 192.168.0.222. Only change this if it is absolutely necessary due to your network structure; in this case a device restart is required (incl. deleting the currently stored graphs*). Contact your system administrator if necessary.

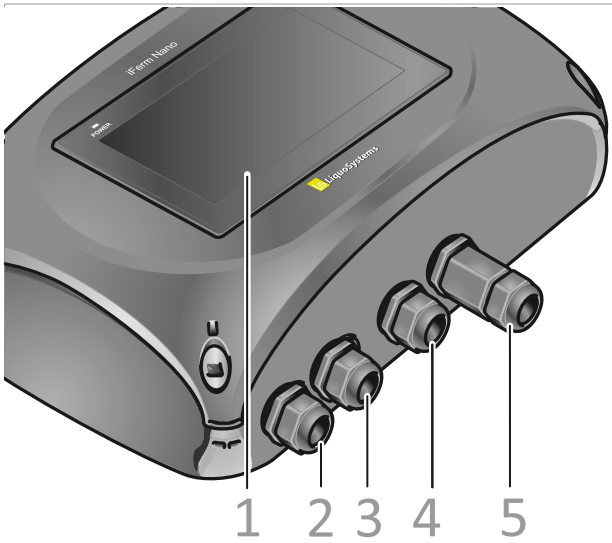

- Undo the cable screw connection of the Ethernet connection (5) to expose the Ethernet socket.
- Disassemble the cable screw connection. This is comprised of a screw sleeve with a male and female thread, a shank with an inserted seal and a union nut.
- Guide the Ethernet cable through the union nut.

- Insert the cable into the seal and guide it through the shank and the screw sleeve.
- Insert the Ethernet cable into the socket on the housing.
- First only loosely screw the union nut and the screw sleeve so that you can still align them.
- Screw the screw sleeve onto the cable screw connection so that the seal slides into the union nut inside the shank.
- Tighten the screw sleeve, cable screw connection and union nut sufficiently so that the seal protects the screw connection against dirt and splash water.
- Connect the loose end of the Ethernet cable to your network. It might be necessary to change the IP address of *iFerm Nano Terminal* in order to adapt it to your network (**Global settings** menu). Contact your system administrator or IT expert if necessary.

5 Operation

This chapter contains instructions on operating steps that are usually required during normal operation.

5.1 Notes on operation

5.1.1 Concepts and illustrations

Since the actual display depends on the type and number of the connected devices, the screenshots used in these instructions are only examples for illustrative purposes.

Since *iFerm Nano Terminal* can be operated via the PC or on the device itself, no language differentiation has been made in the instructions: “Press ...” means that you either touch the terminal’s touch screen with your finger or click on another input device.

5.1.2 General operating instructions

Basically you can perform all inputs via the terminal’s touch screen or via the optionally available Web browser function of a PC connected to the terminal. Perform the inputs on the touch screen during the initial commissioning.

i	**Information** Green areas are buttons or input fields.

5.1.3 Buttons

When performing an input via the terminal's touch screen, touch the buttons with your finger. When performing an input via the Web browser* of a connected PC, use the mouse or touch pad in the usual way.

Button	Brief description
	Home: Open start screen.
	Settings: Open global settings or device settings.
	Back: Return to the last screen opened.
	Setup: Open the submenu of the current view.
	Padlock: Block device.
	Circuit management*: Open the circuit management.
	Chiller*: Open the settings for the chiller.
	Device group 1*: Display devices 1 to 10.
	Device group 2*: Display devices 11 to 20.
	Device group 3*: Display devices 21 to 30.
	Forward: Change to next device.
	Back: Change to previous device.

5.1.4 Enter letters and numbers

Alphanumerical input block

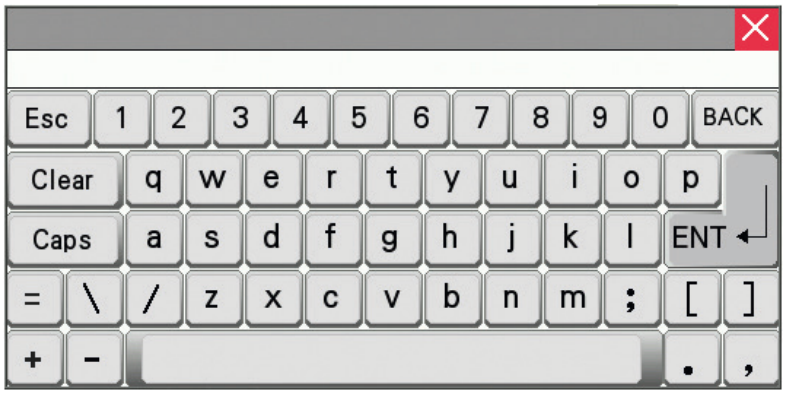

Numerical input block

> **Information**
> When operating the terminal via the Web browser*, always use the mouse to enter characters via the on-screen keypad. The PC keyboard is not activated for the input.

Special buttons	Brief description
BACK / <-	**Backspace**: Delete the last character entered.
Clear / CLR	**Clear**: Clear the input field to start the input again.
ENT / ENTER	**Enter**: Confirm input.
Esc	**Escape**: End input without saving.
	Close: Close input block without saving.

- Press in the field in order to activate it for the input. The corresponding input block (text or numbers) is opened depending on the type of field.
- Press on the letters or numbers that you want to enter. In special fields (date, time), enter the blocks (e.g. day, month, year) individually.
- Press on the Enter button to end the input.

5.1.5 Display

If no input is made, the display switches over automatically:

The device overview is displayed after two hours.

- Press anywhere on the display in order to return to the originally opened view. If this was in a protected area, you must enter your password again.

The display shuts down after seven days, but the terminal remains in operation.

- Press anywhere on the display in order to reactivate the display.

Blocking the display

/	In the device overview, press the open padlock in order to block the display to unwanted inputs. Press the padlock button with the lock arm closed to cancel the block again.

5.2 Protected areas

To prevent unauthorised persons changing settings on the terminal, various areas are pass-word-protected. The protected areas are divided up into a user level and a service level, whereby the service password also incorporates the rights of the user level.

User level	Level	Rights
User	1	The password applies to the global settings.
Setter (fitter)	2	The password applies to the Fitter level, in which the fitter activates and deactivates the controller's addresses.

Attention!
The passwords cannot be changed!
The passwords are fixed and cannot be changed. They must therefore never be given out carelessly!

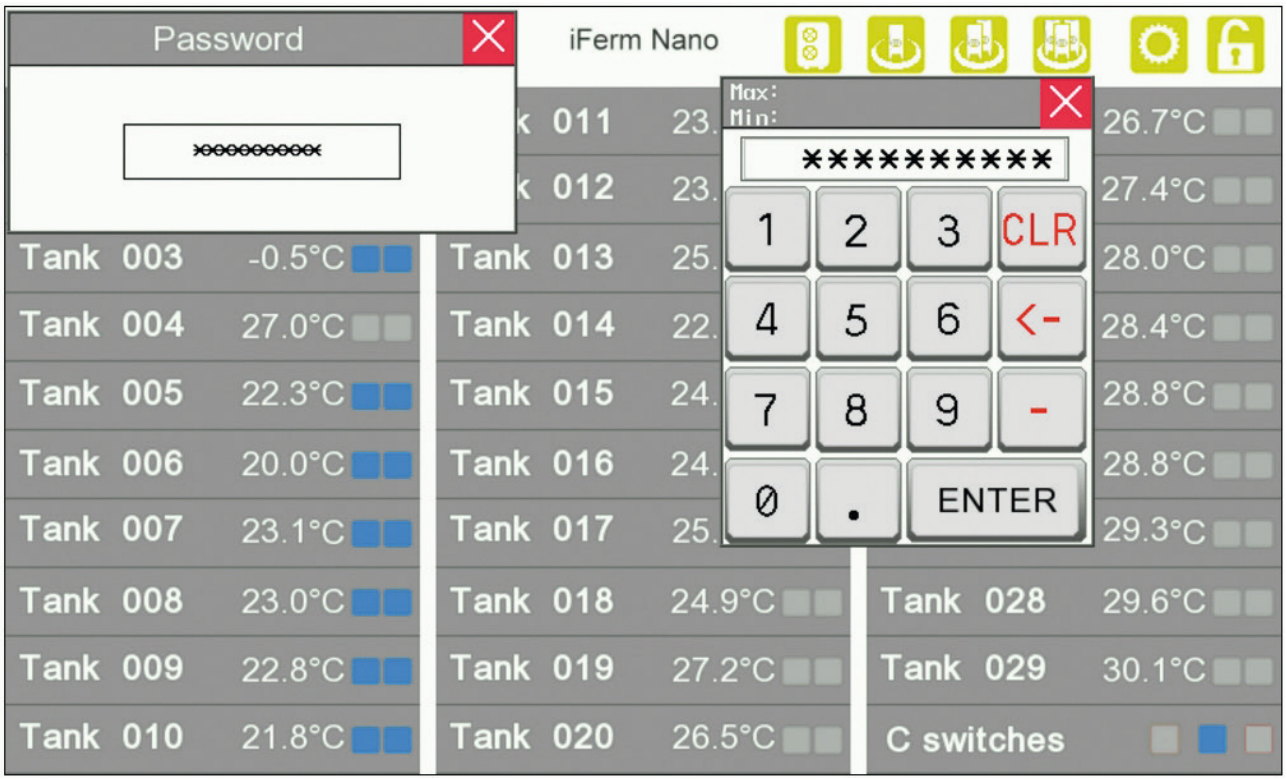

Information
If an error message covers the input window following an incorrect entry, move this error message to the side:

➡ Press once on the error message and once in an area of the screen in which the error message does not disturb (e.g. bottom left).

5.3 Commissioning and subsequent integration of further controllers

Information
For quick and problem-free commissioning of your *iFerm Nano* fermentation temperature system, it is best to engage our customer service, see *"9.6 Customer service" on page 48*.

EN

Attention!
Requirements for subsequent integration of further controllers
In order to reach a synchronisation without faults, you absolutely must set **all** controllers to *Monitor* mode.

It is essential to follow the sequence below during commissioning:

Before commissioning:

- Perform all the necessary installations (electrical and hydraulic), or have them performed.
- Check all electrical and hydraulic installations.
- Keep the passwords in the supplied list to hand.

Preparing IDs

- Check whether a unique ID has been assigned to each connected controller. Details of this can be found in the controller's operating instructions.
  - Each controller ID may only be assigned once for each terminal. IDs assigned more than once cause very serious faults in the system!
  - IDs from 1 to 31 are allowed, with the following IDs having special functionalities:
    ID 30 can be used for the special function **Collective switches** as an alternative.
    ID 31 can **only** be used for the special function **Chiller**.
  - The IDs are displayed in the terminal's device overview in three columns in the following order:

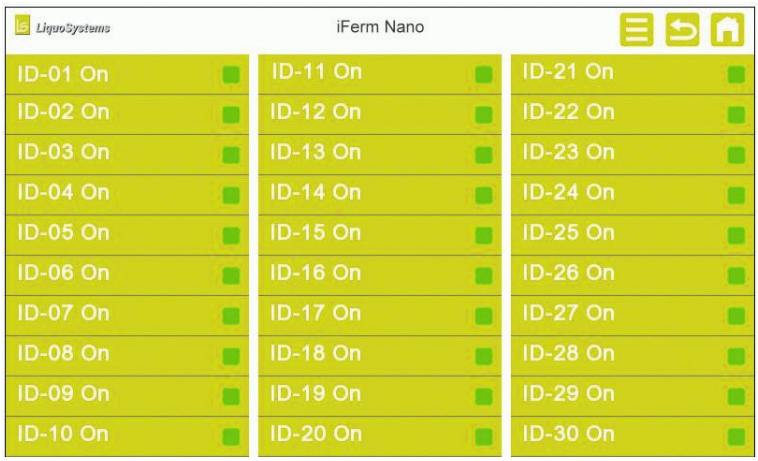

Tip
Careful planning and assignment of the controller IDs gives you a better overview and saves you having to make changes later.

- Use the table in the appendix to create a list of all controllers and to note the assignment to the display position. Set IDs on the controllers according to these display positions and then activate them on the terminal. Two IDs can be swapped later at any time. To do this, both controllers should be set to *Monitor* mode. You will find the sample table for the assignment in the chapter *"9.7 ID overview" on page 49*.

Switching on the terminal

You can start commissioning as soon as *iFerm Nano Terminal* is properly connected to the devices.

➡ Connect *iFerm Nano Terminal* to the mains.

	Making the basic settings Before you commence with the configuration of *iFerm Nano Terminal*, make a few basic settings. The device overview is shown after start-up
	➡ Press the button with your finger to open the **Settings** menu and enter your user password.
	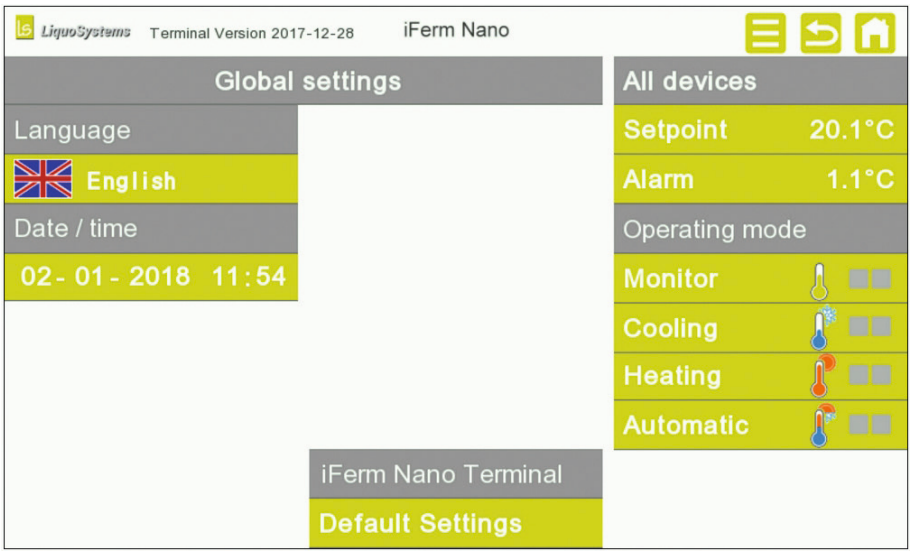 In the **Settings** menu, you will see in the header line the installed software version and you set the language, date and time during commissioning. You will make further basic settings here later. Only the software modules that you have purchased are shown in the settings. Contact our customer service if you want to add further modules later, see *"9.6 Customer service" on page 48*.

Language	➡ Press the language to change it; you must press the button several times in order to return to the original language set.
Date / time	➡ Press in an area of the green field (day, month, year, hour, minute) to open the numerical input block. ➡ Enter the new value for this area. If necessary, you can read notes about entering numbers in the chapter *“5.1.4 Enter letters and numbers” on page 18*. Make all the other settings later; first activate the connected devices that *iFerm Nano Terminal* is intended to control.
	➡ Open the **Setup** submenu and enter your setter password.
	 For the first start-up, only the controller with the ID 01 is activated.
	➡ Press on deactivated device IDs (red) to activate them, or on the activated (green) ones to deactivate them.
	➡ When all devices to be controlled from the terminal are activated, return to the **Global settings** menu. Here you perform settings for all devices in the area on the right.

All devices	➡ Press on the setpoint value and enter which temperature the connected controllers should aim for. ➡ Press on the alarm and enter the deviation as from which an alarm should be triggered. **Attention!** ➡ Press on *Monitor* mode to initially observe all devices. Only in this way can you be certain that the terminal and controller are synchronised. If the devices are not synchronised, malfunctions can occur. The special functions that you acquired with your *iFerm Nano Terminal* (valve maintenance, collective switches, groupings, Web browser) are displayed and can be activated when required. ➡ Activate the required special function. For the Chiller special function, you must first set up the ID 31, see chapter *"6.5 Chiller*" on page 34*. Make all the other settings later; first activate the connected devices that *iFerm Nano Terminal* is intended to control.
	➡ Complete commissioning by returning to the device overview.

5.4 Device overview

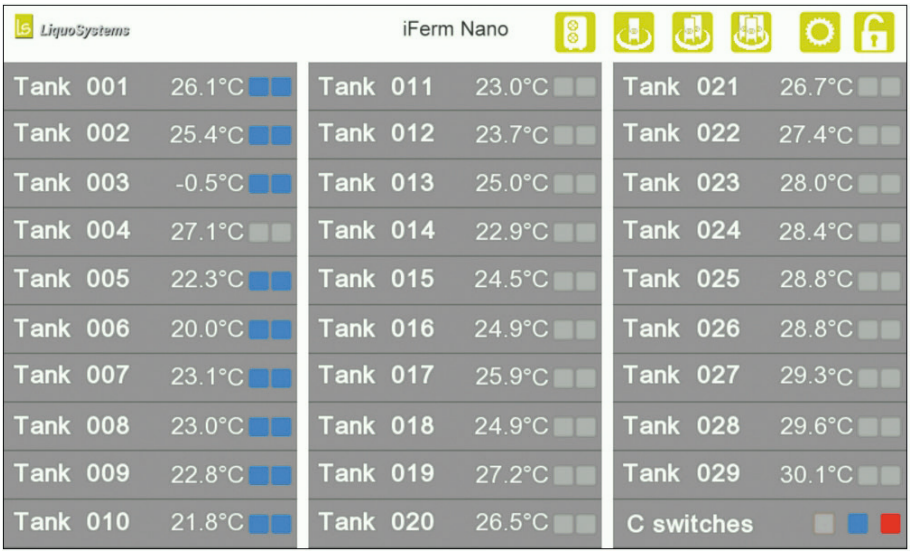

The device overview gives you a quick overview of all devices and temperatures. You can see which devices are set to which operating mode, and whether there are any alarm messages. From here you open the main views of the individual devices in order to adjust settings.

➡ Press on a device to open its main view.

EN

5.4.1 Device main view

In the main view of a device you will find all the important information at a glance, and can adjust some parameters.

Header line	Brief description
	➡ Open the start screen **Home**.
Tank xx	➡ Open the main view of the device for which you want to display or change the parameters.

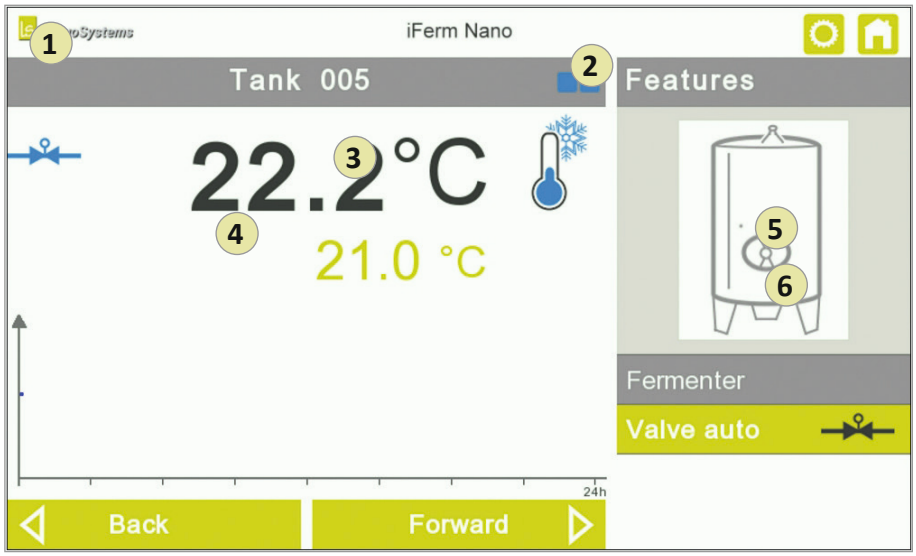

Area	Brief description
1	***Valve status and alarm*** ● When the connected device opens a valve, this is shown by a coloured symbol: – Blue = Cooling – Orange = Heating ● If the difference between the setpoint and actual temperature is greater than the permitted maximum that has been defined as the alarm threshold, this is indicated by a symbol: – Red = **Attention Alarm**: Difference between the setpoint and actual temperature is greater than the permitted maximum that has been defined as the alarm threshold. ● If the display is blank in this area, the connected device is not operating a valve and there is no alarm.

Area	Brief description
2 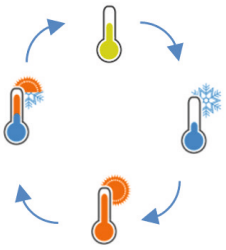	***Operating mode*** ➡ Press on the thermometer to select the device operating mode: – Green = Monitor – Blue = Cooling – Orange = Heating – Blue/Orange = Automatic (**Attention**: *Automatic* mode can cause malfunctions with *iFerm Nano Solo* and is thus **not** permitted there.)
3	***Setpoint temperature*** ➡ Press on the setpoint temperature in order to change it. The possible input limits are displayed in the input window at top left. **Information** Alternatively to operation via *iFerm Nano Terminal*, you can also change the setpoint temperature on the controller. To do this, follow the corresponding information in the respective operating instructions.
4	***Comment*** ● If you have added a comment to the settings of the device, this is shown above the temperature graph.
5	***Device designation*** ● Device designation (linked to the selected tank illustration, not configurable). You can change the designation and illustration in the settings.
6 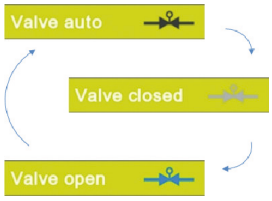	***Manual operation of the valve*** ***Valve setting display*** ➡ Change the valve settings of the selected device: – Valve auto = Valve opens and closes automatically (standard operation) – Valve closed = Valve is closed (manual operation) – Valve open = Valve is open (manual operation) Manual operation is illustrated throughout the system in the form of a hand on the corresponding device. Further details of the valve settings can be found in chapter *“7.1 Global settings” on page 39*.
Back / Forward	➡ Scroll back to the previous or forward to the next device.

	➡ Open the further settings of the device.

EN

5.4.2 Other device settings

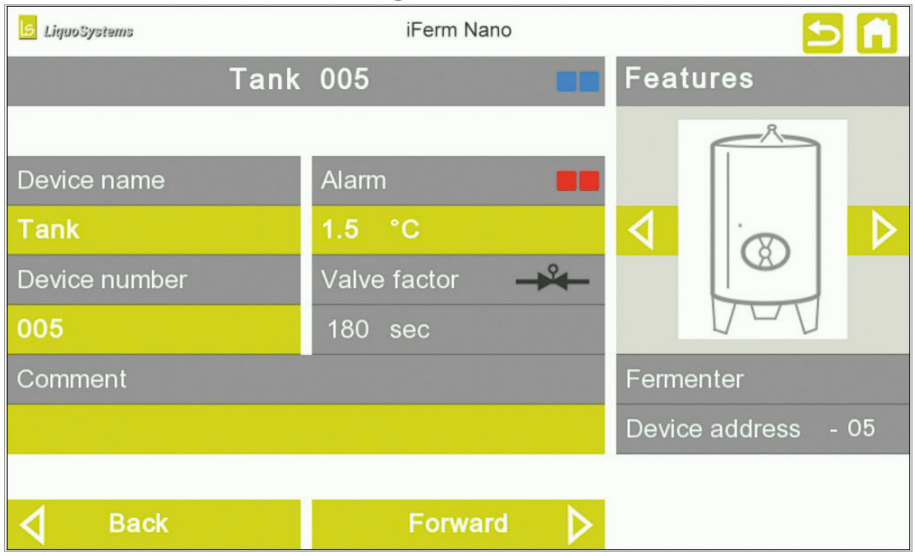

Settings	Brief description
Device name	➡ Press on the green field and use the alphanumerical input block to enter a new device name, max. 4 characters.
Device number	➡ Press on the green field and enter a new device number, max. 3 characters.
Comment	➡ Press on the green field and enter a new comment for the device, max. 26 characters.
Alarm	➡ Press on the green field and enter a new limit value that should trigger an alarm if it is exceeded or not reached. The value must be between 0.5 and 10.0 degrees.
Valve factor	The valve factor is the minimum opening time of the valve and is not adjustable (180 sec.).
Features	**Device illustration** Various device illustrations are available so that you can also distinguish visually between your tanks. ➡ Scroll through the available device images and select the one that most closely resembles the physical device. **Name of device image** The name of the device image is stored in the software and cannot be changed. **Device address** The address of the device is stored in the software and cannot be changed. **Attention!** In the device overview, all devices are shown in the order of their IDs. To put your devices into the optimum display order for you, create a list and assign the device IDs in the corresponding sequence; see chapter *“Preparing IDs” on page 21*.

Settings	Brief description
Back / Forward	➡ Scroll back to the previous or forward to the next device.

Header line	Brief description
	➡ Return to the main view of the device.
	➡ Open the start screen **Home**.

6 Special functions*

The expanded representation of measured values as **graphs** and the **Collective switches**, **Groupings**, **Web browser**, **Valve maintenance** and **Chiller** functions are additional functions of the *iFerm Nano Terminal* and must be acquired and enabled separately so that they can be activated. Since enabling of the special functions is also possible later, contact our customer service if necessary, see *"9.6 Customer service" on page 48*.

6.1 Valve maintenance*

If the special function **Valve maintenance** is enabled, you can automatically open all valves once at a certain time and close them again. Here, the cooling and heating circuits are controlled separately in turn. The system then returns to its initial state.

➡ Press on the fields in order to activate or deactivate valve maintenance and to define the modalities.

Switched on / Switched off

➡ Activate or deactivate valve maintenance.

every X weeks

➡ Press the button several times if necessary to select an option for valve maintenance (between 1 and 52 weeks).

always XXX

➡ Press the button several times if necessary to select a day of the week (Monday to Sunday).

at XXX o'clock

➡ Press the button several times if necessary to select a time (00:00 to 23:00).

EN

6.2 Graph display*

While the graph display in the main view of the connected devices is an element of the basic configuration of your *iFerm Nano Terminal*, the detail display with enlarged views of 5 or 50 days can only be used following enabling. Contact our customer service if necessary, see *"9.6 Customer service" on page 48*.

Header line	Brief description
	➡ Open the start screen **Home**.
Tank xx	➡ Open the main view of the device for which you want to display the temperature graph in detail.
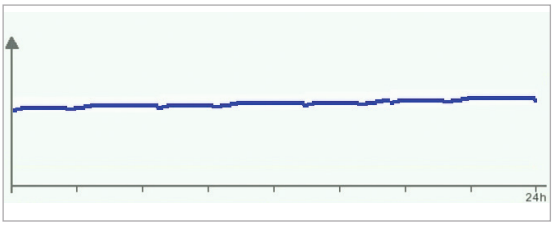	➡ Press on the 24-h display of the graph in the device's main view in order to open the detail view.

The details of the last 5 days are shown enlarged.

	In this detail view, you will see the following graphs: Light blue = Currently set setpoint temperature Dark blue = Current actual temperature Light brown = Density (g/l) You can define the density in this view.
Density	➡ Open the input window and define a new value for the density (g/l) (between 990 and 1140).
	➡ Press on the magnifying glass to change to the view of the last 50 days.
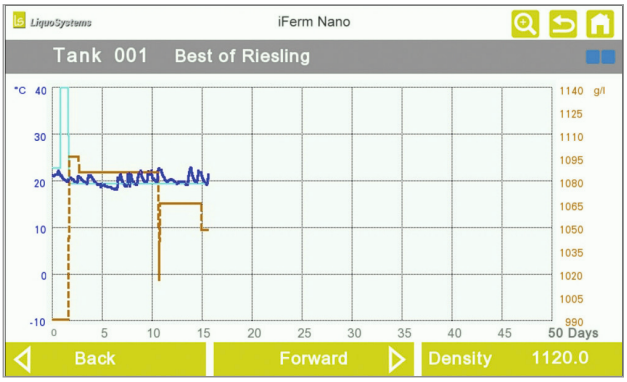	In the overview of the last 50 days, you can see the device's long-term temperature graph.
Back Forward	➡ Scroll back to the previous or forward to the next device.

/	➡ Press on the respective magnifying glass in order to change between the 5-day view and the 50-day view.
	➡ Return to the main view of the device.

Attention!
Older recorded data is deleted!
If the data recording goes beyond the time axis, the older values are rejected. Older data is deleted after 50 days in order to free up memory space.

Attention!
The graphs are deleted if there is a power failure!
Since the memory containing the measured values for the graphs is a temporary memory, it is deleted if there is a power failure.

➡ Avoid power supply interruptions.

6.3 Collective switches*

Attention!
Activation only with controllers connected and switched on!
Reliable functioning of the collective switches requires at least one device to be connected and switched on. As soon as the collective switches special function has been successfully configured, this is indicated on the connected device by a key.

Information
iFerm Nano Top is absolutely essential as an accessory for the **Collective switches** special function.

If the **Collective switches** special function is enabled on your *iFerm Nano Terminal*, you can activate it to constantly monitor the devices with the IDs 1 to 29. To do this, assign to the ID 30 an *iferm Nano Top* as the controller. As soon as this then switches a contact (*Cooling*, *Heating* or *Alarm*), a corresponding collective switch is output. This can be output by a higher-order system, e.g. a cooling requirement or a pump signal.

Information
One collective switch each for cooling requirement, heating requirement and alarm can be output independently of each other.

Requirements

- The **Collective switches** function must be activated (**Global settings** menu).
- The **Collective switches** function is arranged behind all individual devices and is at the ID 30. This must therefore be activated in order to use the function (**Register** submenu in the **Global settings** menu). You then assign a *iFerm Nano Top* to the ID 30, to which the collective switches can be output via *iFerm Nano Switch* via a potential-free contact.

EN

Header line	Brief description
	➡ Open the start screen **Home**.
C switches	➡ Press the **C switches** button at bottom right. If the **C switches** button is not displayed on the ID 30, you must first activate the **Collective switches** function (**Global settings** menu).

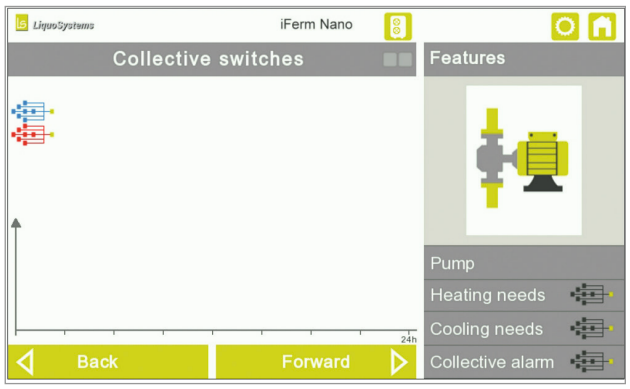

In the main view of the collective switch, you will see the symbols at top left as soon as a collective switch is switched:

Blue = Cooling

Orange = Heating

Red = Alarm

If the the collective switches are read in from a second *iFerm Nano Terminal*, the respective symbol appears alongside once again. This enables you to see where the collective switch was switched.

You will see the following settings at bottom right:

Grey = Collective switch permanently switched off, Manual mode

Black = Collective switch in automatic mode

Coloured = Collective switch permanently switched on, Manual mode

Since the individual IDs are checked, the response time until a collective switch is switched on can be up to 30 seconds.

➡ Open the settings of the collective switch.

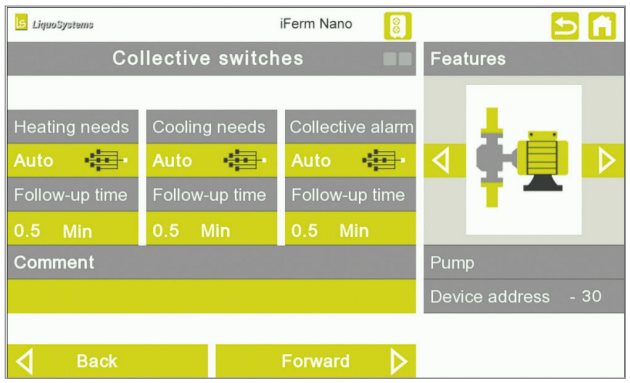

➡ For the parameters *Heating needs*, *Cooling needs* and *Collective alarm*, select whether these should be switched on, switched off or controlled automatically.

➡ For each parameter, define an follow-up time of between 0.5 and 60 minutes.

➡ Enter an explanatory comment if necessary.

Information

When the functions **Collective switch** and/or **Chiller** are used, the key symbol is displayed on the respective controller; and LoPE appears instead of the actual temperature in order to draw attention to the activated special function.

6.4 Groupings*

If the special function **Groupings** is enabled on your *iFerm Nano Terminal*, you can activate it to manage your connected devices in three groups of 10 devices each. From your devices, you then form groups in order to give them a common group name and to display them in the group view. This gives you a quick overview of the various devices.

When necessary this allows you to, for example, set the operating mode of a group's devices centrally, and even to define setpoint and alarm values centrally.

Example

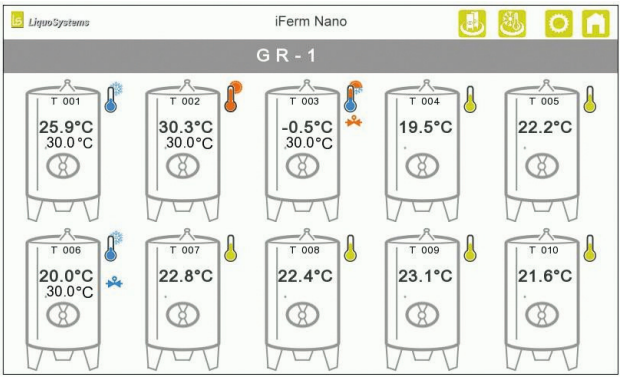

- The tanks with the IDs 1-10 are combined in the group with the name GR - 1.
- Specific device images are not assigned.
- The tanks with the ID 1 (T 001) and 6 (T 006) cool, the setpoint and actual temperatures are displayed.
- The tank with the ID 2 (T 002) heats, the setpoint and actual temperatures are displayed.
- The tank with the ID 3 (T 003) is in Automatic mode, the setpoint and actual temperatures are displayed.
- The remaining tanks are observed, only the actual temperature is displayed.

Information
Generally, the devices with the IDs 1–10 can form the first group, those with the IDs 11–20 the second group and IDs 21–30 the third group. If the Circuit management* is used, the devices with the IDs 21–24 are not assigned to any group.

Header line	Brief description
	➡ Open the start screen **Home**.
	➡ Open the view of the first group. This is opened. It may be that no devices have yet been assigned to it.
	➡ Open the settings of the group in order to add devices to it.

EN

Button	Brief description
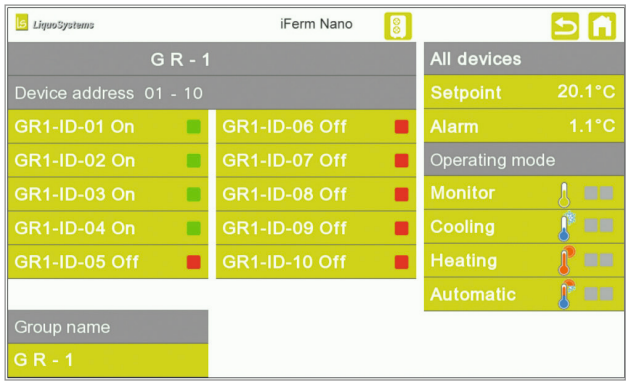	➡ Press on the red squares next to the devices in order to add them to the group in each case. The devices that have already been added to the group are marked by green squares (in the example on the left, the devices with the IDs 1–4 have been added to the group). ➡ Change other group parameters if necessary: – Group name – Common setpoint and alarm values – Common operating mode for all devices in this group For the Cooling and Heating modes, you can also set the valve function.
	➡ Open the group view after completing the settings.
	➡ Create the second and third groups in the same way.

6.4.1 Circuit management*

As a special function of the groupings, the circuit management is an alternative to the device group 3. You activate this function via the settings of the device group and then select the corresponding circulation system.

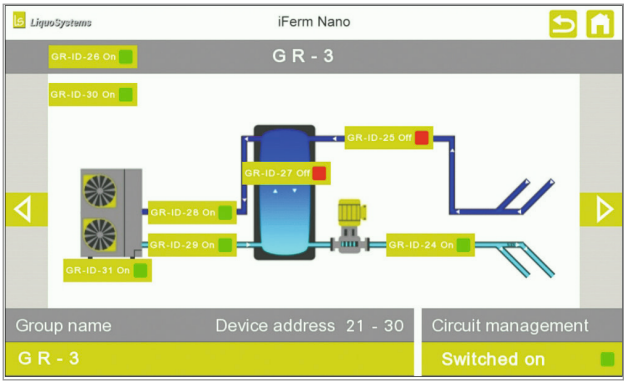	• The devices with the IDs 24–31 are combined in the group with the name GR - 3. The devices with the IDs 25 and 27 are deactivated, all others are activated. • The circuit management is activated.

Header line	Brief description
	➡ Open the start screen **Home**.
	➡ Open the view of the third group and assign to it all devices that are to be included in the circuit management.

Header line	Brief description
	➡ Open the settings of the third group and adapt them.
	➡ Press on the red square in order to activate the Circuit management function.
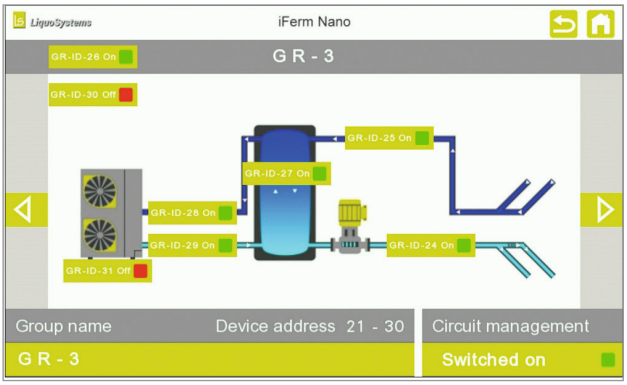	The devices currently included in the circuit management are displayed.
	➡ Use the arrow keys to select a suitable view of your configuration.
	➡ Return to the overview.
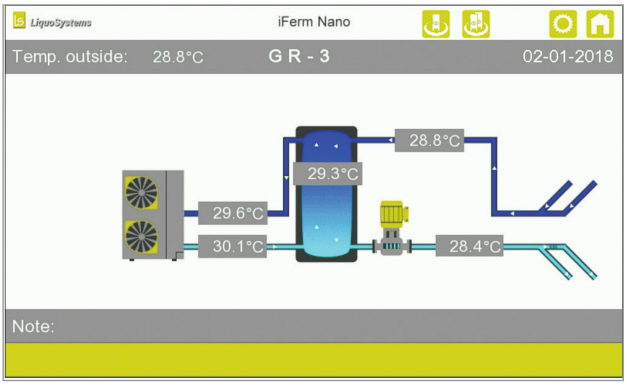	The currently set temperatures are displayed.
	➡ Press on one of the fields in order to change the settings of the corresponding device.

6.5 Chiller*

If the special function **Chiller** is enabled, you can activate it in order to operate a chiller on the ID 31.

> **Information**
>
> *iFerm Nano Top* is essential as an accessory for the special function **Chiller**.

EN

Activating the chiller

Attention!
For the **Chiller** special function it is essential that a device is connected, set to the device address ID 31 and activated.

Button / area	Brief description
	➡ Open the start screen **Home**.
	➡ Open the **Chiller** option.
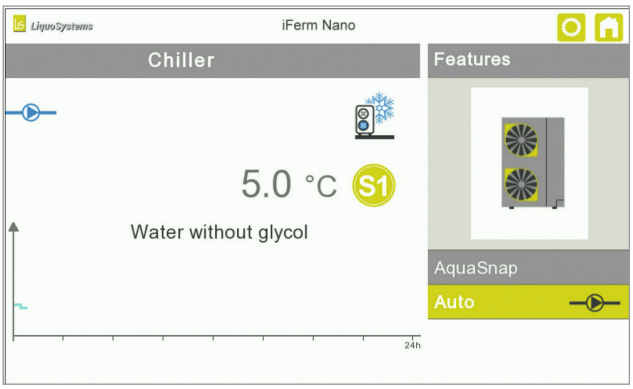	In the overview of the **Chiller** function, you can see the current settings of the connected device.
	➡ Open the settings of the **Chiller** function.
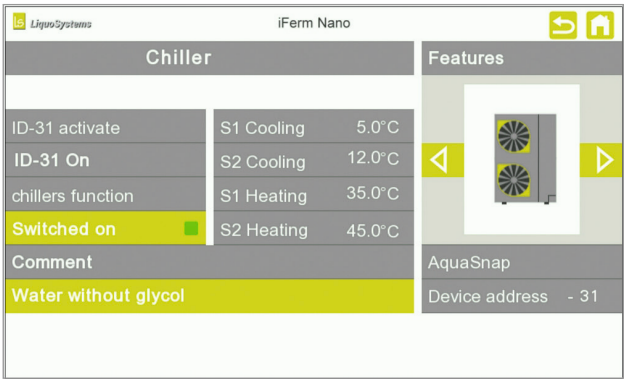	➡ Activate the option **ID-31**. In doing so, you also activate the optional chiller ID 31 in addition to the mandatory controller IDs 1–30. ➡ Activate the option *Switched on*. ➡ If necessary, select other settings for the parameters *Cooling* and *Heating* of *S1* and *S2*. ➡ If necessary, change other parameters of the chiller and enter an explanatory comment.

Information
When the functions **Collective switch** and/or **Chiller** are used, the key symbol is displayed on the respective controller; and LöPE appears instead of the actual temperature in order to draw attention to the activated special function.

6.6 Web browser*

If necessary, you can operate *iFerm Nano Terminal* via the Web browser of a computer. This can be any desired network-capable device with an Ethernet connection (PC, laptop, tablet, smartphone). If no network connection is available, ask your system administrator to make the appropriate connections.

You can use the **Web browser** function to integrate your *iFerm Nano Terminal* into your company's already existing network. In this case you must, if necessary, change the terminal's IP address (**Global settings** menu).

6.6.1 Activating the Web browser

If the **Web browser** special function is enabled, you can activate it in order to access the user interface of your *iFerm Nano Terminal* with a PC or another network-capable device.

Requirement

- *iFerm Nano Terminal* is connected to your PC or network via a network cable.

Button / area	Brief description
	➡ Open the start screen **Home**.
	➡ Open the **Global settings** menu.
Web Browser Switched off	➡ Press on the red square in order to allow or deactivate access to the terminal via Web browser.
LiquoSystems Terminal Version 2017-12-28 iFerm Nano Global settings: Language – English; Date / time – 02-01-2018 11:56; Valve maintenance – Switched on; every 1 weeks; every Thursday; at 11:00 o'clock Collective switches – Switched on; Groupings – Switched on; Web Browser – Switched on; 192. 168. 0 . 222; iFerm Nano Terminal; Default Settings All devices – Setpoint 20.1°C; Alarm 1.1°C; Operating mode – Monitor; Cooling; Heating; Automatic	➡ If necessary, note the IP address in order to enter it in the PC's Web browser, or change the IP address so that the terminal uses an address that is permitted in your network. To do this, press on the individual address areas in turn and change the respective block of numbers.
	➡ Return to the overview.

EN

6.7 Access via the Web browser of a PC

Requirement

- The **Web browser*** function in the *iFerm Nano Terminal* is enabled and activated (**Global settings** menu).

➡ Open the Web browser (Google Chrome© is recommended) on an PC logged on in the network.

➡ Enter the IP address in the address line of the browser (standard IP address 192.168.0.222 or, for operation in the network, the IP address that you set on the *iFerm Nano Terminal*). You must enter your access data in the first call-up.

Attention!

Never carelessly pass on the access data that you received with your *iFerm Nano Terminal* or when the **Web browser** special function was enabled.

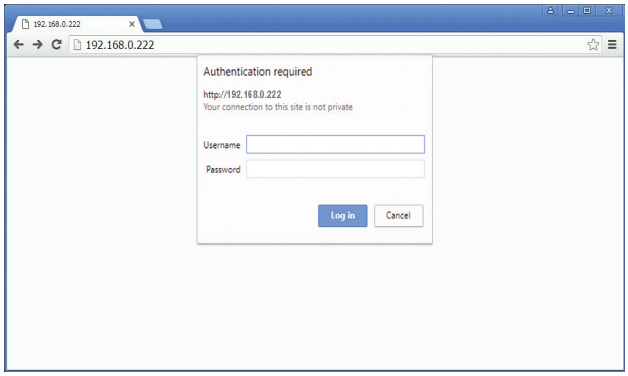

➡ Enter the user name and password.

The overview page of your *iFerm Nano Terminal* is opened.

The first time you log in, you can define whether only reading and display are possible via the browser, or whether inputs may also be made.

➡ Operate the terminal via the Web browser in the same way as using the touch screen.

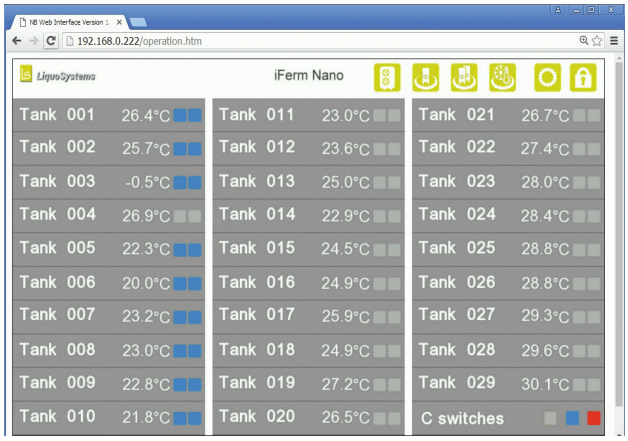

Information

If the authentication window does not appear, there is either no network connection or the IP address does not correspond.

Attention!

- If the IP address is changed (or issued via DHCP), you must enter the new IP address in the browser. In this case, it is necessary to restart the device (incl. deleting the currently recorded graphs*). Contact your system administrator if necessary.
- If you are operating several terminals in your network, you must give them different IP addresses.
- Depending on the level of use of the terminal and of the network, the display in the browser might be slightly delayed.
- When operating the terminal a network, follow the common rules for IT security and/or consult your system administrator.
- Do not deactivate the **Web browser** function if you are operating the terminal via a PC (**Global settings** menu). Otherwise the function must be reactivated directly on the device.

Information

So that you can conveniently monitor your tanks, save the IP address of *iFerm Nano Terminal* (standard 192.168.0.222) as a bookmark in the browser. You can then at any time quickly make sure that your tanks are operating properly.

7 Global settings menu

If you have a password, you can open the **Global settings** menu from the start screen with general terminal settings and special device settings, and change settings if necessary.

Header line	Brief description
	➡ Open the start screen **Home**.
	➡ Open the **Global settings** menu.

➡ Enter your password, see chapter *"5.2 Protected areas" on page 19*.

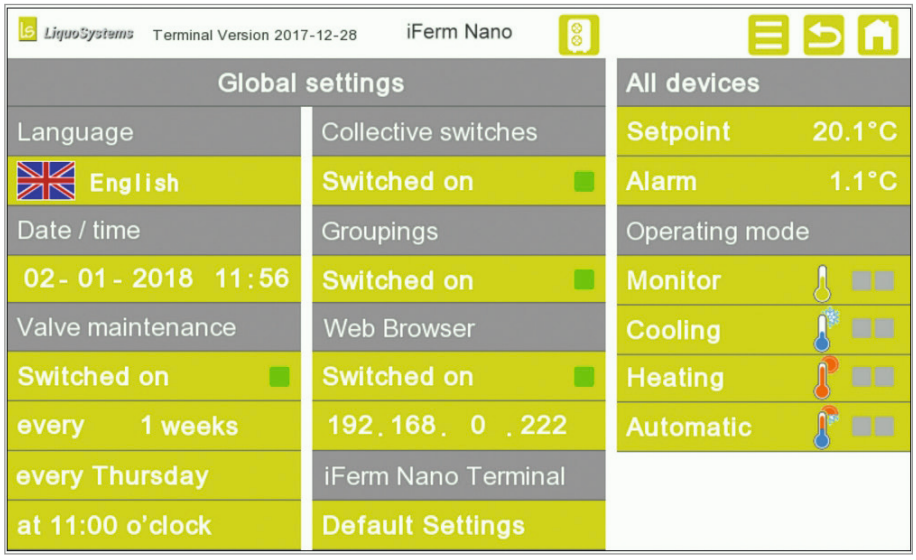

Next to the header line with three standard buttons, you will see on the left the global settings and on the right the special device settings.

Header line	Brief description
	Setup: Open the submenu to activate/deactivate the IDs of the connected devices; the setter's password is required, see chapter *"5.2 Protected areas" on page 19*.
	Back: Return to the last screen opened.
	Home: Open start screen.

7.1 Global settings

Make the general terminal settings in the global settings area.

Settings	Brief description
Language	➡ Press the language to change it; you must press the button several times in order to return to the original language set.
Date / time	➡ Press in an area of the green field (day, month, year, hour, minute) to open the numerical input block. ➡ Enter the new value for this area.
Valve maintenance*	With the **Valve maintenance** special function, all valves are automatically opened once at a certain time and then closed again. Here, the cooling and heating circuits are controlled separately in turn. The system then returns to its initial state. The entire procedure takes about 5 minutes and runs in the background. ➡ Press on the fields in order to activate or deactivate valve maintenance and to define the modalities. **Switched on / Switched off** ➡ Activate or deactivate valve maintenance. **every X weeks** ➡ Press the button several times if necessary to select an option for valve maintenance (between 1 and 52 weeks). **always XXX** ➡ Press the button several times if necessary to select a day of the week (Monday to Sunday). **at XXX o'clock** ➡ Press the button several times if necessary to select a time (00:00 to 23:00).

Settings	Brief description
Collective switches*	**Attention!** **Activation only with a controller connected and switched on at device address 30!** Reliable functioning of the collective switches requires at least one device to be connected and switched on. As soon as the collective switches special function has been successfully configured, this is indicated on the connected device by a key. ➡ Press on the field in order to activate or deactivate the collective switches, for details see chapter *"6.3 Collective switches*" on page 30*.
Groupings*	➡ Press on the field in order to activate or deactivate the grouping, for details see chapter *"6.4 Groupings*" on page 32*.
Web browser*	Switched on / Switched off ➡ Press on the field in order to allow or deactivate access to the terminal via Web browser. IP address ➡ If necessary, note the IP address in order to enter it in the PC's Web browser, or change the IP address so that the terminal uses an address that is permitted in your network. To do this, press on the individual address areas in turn and change the respective block of numbers. ➡ For further details, see chapter *"6.6 Web browser*" on page 36*.
Default settings	➡ Press on the field in order to reset the terminal to the factory setting, for details see chapter *"9.1 Default settings" on page 43*. **Attention!** **Use this option only in exceptional cases!** If you reset, all settings that you have made will be lost, see chapter *"9.1 Default settings" on page 43*.

7.2 Global device operation

In the right hand side area of the **Global settings** menu, you can make a number of settings for all connected devices simultaneously, for example if all devices are to be operated in Monitor mode. If you set heating or cooling as the common mode, you can also set opening and closing of the valve. Common values can also be set for the setpoint temperature and the alarm threshold.

All devices	Setpoint ➡ Press in the field in order to define the setpoint temperature for all devices. You can make other settings for individual device groups later. Alarm ➡ Press on the field in order to define the alarm threshold for all devices. You can make other settings for individual device groups later.

EN

Settings	Brief description
Operating mode	➡ Press on one of the fields in order to define a standard operating mode for all devices. If you select heating or cooling as the standard operating mode, you can also permanently open or close all valves if necessary (*Valve open*, *Valve closed* or *Valve auto*). **Information** If you want to make settings for just a few devices rather than all of them, combine the devices and make group settings, see chapter *"6.4 Groupings*" on page 32*.
	➡ Press the button to return to the main window of the device overview.

Information
If no inputs are made for a period of 7 minutes, the terminal automatically changes to the view of the main window with the device overview.

From the **Global settings** menu, you can change to the submenu for activating/deactivating the devices.

	➡ Open the **Setup** submenu.

➡ Press on activated device IDs (green) to deactivate them, or on deactivated (red) ones to activate them.

8 Maintenance and care

iFerm Nano Terminal is designed for continuous and largely maintenance-free operation. The following instructions will help you to always keep *iFerm Nano Terminal* in an operational state and to immediately remedy any faults that occur.

Attention!
Regular factory inspections help ensure permanently safe operation and that all parameters are reliably adhered to. You should therefore have the inspections carried out regularly every 2 years.

- Do not perform any repairs on *iFerm Nano Terminal*.
- If in doubt, contact our customer service, see *"9.6 Customer service" on page 48*.

8.1 Cleaning

8.1.1 Housing, display and connecting cables

iFerm Nano Terminal is protected against the ingress of dust and water jets (IP65). Normally, simple cleaning measures are sufficient. Follow the instructions below:

- Remove accumulated dust and dirt from *iFerm Nano Terminal* and the connecting cables at regular intervals:
  - Use a soft, damp cloth to do this.
  - Do not use any aggressive, scouring cleaning agents or cleaning agents containing solvents.
- Avoid intensive contact with liquids (e.g. by immersion, high-pressure cleaners). Keep the power connection and plug dry at all times.

EN

9 Appendix

9.1 Default settings

If it becomes necessary to reset *iFerm Nano Terminal* to the default settings (**Global settings** menu), the following settings are predefined afterwards.

Attention!

Only the terminal is reset!

Resetting to the default settings resets only the terminal. If you also want to reset the connected controllers, see chapter *"9.6 Customer service" on page 48*.

Attention!

No access is possible via Web browser following the reset!

Since browser access is deactivated in the default settings, following the reset you must activate it on the device in order to restore access via the PC.

Parameter	Value
Language	German
Operating mode (all devices from ID-01–ID-30)	Monitor
Device name (all devices from ID-01–ID-30)	Tank
Device number	001-030
Device comment	Blank space
Valve maintenance*	deactivated or not available, special function ● Valve maintenance cycle every Thursday at 11:00
Collective switches*	deactivated or not available, special function ● Follow-up time of the Cooling and Heating collective switches = 10 minutes ● Follow-up time of the alarms = 0.5 minutes ● Control = automatic
Groupings*	deactivated or not available, special function ● Group name – GR-1 – GR-2 – GR-3
Web browser*	deactivated or not available, special function ● IP address 192.168.0.222

9.1.1 Resetting the controller and terminal

You can perform a common reset on the terminal and all connected controllers. To do this, first adjust all devices to the same settings, see below.

Attention!

No access is possible via Web browser* following the reset!
Since browser access is deactivated in the default settings, following the reset you must activate it on the device in order to restore access via the PC.

Setting	Brief description
	First set the connected controllers back to the factory settings:
	➡ Open the start screen **Home**.
	➡ Open the **Global settings** menu.
All devices Setpoint 20.1°C Alarm 1.1°C Operating mode Monitor Cooling Heating Automatic	➡ Set the setpoint in the **All devices** area to 20.0 °C.
	➡ Set the value for the alarm in the **All devices** area to 1.5 °C.
	➡ Set all devices to the **Operating mode** *Cooling*. With this, all connected controllers are reset to the factory settings.
	You can now reset the terminal:
Default Settings	➡ Press the **Default settings** button. After the reset, all controllers are set to Cooling mode with a setpoint temperature of 20 °C; you can find the terminal's settings in the chapter *"9.1 Default settings" on page 43*.

EN

9.2 Technical data

Parameter	Value
Display	TFT colour touch screen LED backlighting Screen size 7 inches Resolution 800 x 480 pixels More than 65,000 display colours
Software version	The currently imported software version can be found in the **Global settings** overview, see chapter *"7 Global settings menu" on page 38*.
Power supply	100–240 V, 50/60 Hz
Power consumption	0.4 A
Fuse	800 mA, slow blow
Battery service life	5 years; if necessary, contact our customer service, see chapter *"9.6 Customer service" on page 48*.
Size (H x W x D)	approx. 280 x 360 x 140 mm
Weight	approx. 2.8 kg
Protection class	IP65
Operating and storage conditions	Temperature range 0 to +50 °C Icing or condensation not allowed Relative humidity 10 to 85 % No direct sunlight

9.3 Troubleshooting

If the *iFerm Nano Terminal* is not working properly, the following can help to remedy the fault:

Fault	Cause	Remedy
Display shows nothing.	Display switched off.	Press display to activate it.
	No power.	Check power supply (supply cables, fuses etc.).
	Display faulty.	Contact customer service, see chapter *"9.6 Customer service" on page 48*.
Display shows no reaction to operation.	Display locked.	Press the padlock button to unlock the display.
Error message covers input field.		Push error message to the side: Press once on the error message and once in an area of the screen in which the error message does not disturb (e.g. bottom left)
Connected device is not displayed.	Associated ID not activated, or controller fault.	Activate ID, see chapter *"5.3 Commissioning and subsequent integration of further controllers" on page 20* or replace controller.
Display shows error message with hex code	One or more IDs are activated, but not present.	Either connect or deactivate corresponding ID(s), see chapter *"5.3 Commissioning and subsequent integration of further controllers" on page 20*.
iFerm Nano Terminal is switched off.	Power failure	Start up *iFerm Nano Terminal* again; check whether all settings have been preserved.

Fault	Cause	Remedy
No access via Web browser.	Browser access deactivated on terminal.	Activate browser access, see chapter *"6.6 Web browser*" on page 36*.
	IP address changed.	Check the IP address at the terminal, see chapter *"6.6 Web browser*" on page 36*, change it if necessary and/or update the link in the browser to the other IP address.
	Network cable or plug faulty.	Check the connection of the network cable or plug both externally and internally, and replace if necessary.
Communication interrupted (entirely or in part).	Device failure or faulty data bus. The device that has failed can be seen in the middle block of the error message hex code. In the example (00-01-2) it is the device with the ID-01; the message 00-F5-02 would refer to ID-20.	Deactivate the faulty device to cancel the error message, and replace the device. After replacing the device, on the new controller set the ID of the previously used device and activate this again on the terminal.
No access. 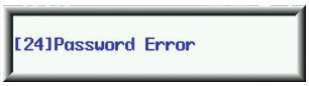	Wrong password entered.	Use the passwords in the list supplied on delivery. If you have lost this in the interim, contact our customer service, see chapter *"9.6 Customer service" on page 48*.
Number entry is not working.	Entry limit exceeded or not reached.	Pay attention to the limits in the header line of the numerical input block and enter a corresponding value.

Contact us directly if the fault persists or if you need spare parts, see chapter *"9.6 Customer service" on page 48*.

9.4 Disposal

iFerm Nano Terminal must be properly disposed of at the end of its useful life:

- Secure the old appliance against unauthorised access.
- Never put the old appliance in with domestic waste. Use a collection point for returning and recycling old appliances.
- Follow the disposal regulations that apply in your region.

9.5 Declaration of conformity

CE

iFerm Nano Terminal

Manufacturer:	LiquoSystems GmbH Wilhelmstraße 45 74366 Kirchheim / Neckar Germany
Declaration:	We hereby declare that the product *iFerm Nano Terminal* meets the requirements of the following EU directives: 2011/65/EU: RoHS 2014/30/EU: Electromagnetic compatibility 2014/35/EU: Electrical equipment (low voltage)
Product type:	Temperature controller
Date:	12/06/2017
Signature:	S. Wieland Stephan Wieland, Managing director

9.6 Customer service

LiquoSystems is one of the few brand suppliers in the field of cellar technology for professional tank cooling and temperature control. We supply refrigerators, heat exchangers, temperature controllers and accessories, through to turnkey installation on your premises.

If you have any questions about our products or about how to extend and optimise your system, please contact us directly:

LiquoSystems GmbH

Wilhelmstraße 45 | 74366 Kirchheim/Neckar, Germany
Tel.: +49 7143 891050 | Fax: +49 7143 92868
info@liquosystems.de | www.liquosystems.de

You'll always be on the safe side with our factory customer service and repair service:

Technical assistance

Hours of business:	Mon. – Thu.:	09:00 am – 16:30 pm
	Friday:	09:00 am – 13:00 pm
E-mail:	e-kundendienst@liquosystems.de	
Phone:	**+49 7143 891050**	

Hotline	10th September to 10th November Mon. – Fri.: 08:00 – 20:00 pm Sat. + Sun.: 09:00 am – 18:00 pm

9.7 ID overview

➡ Enter your assignment of IDs to devices in the following table.

Date:

ID	Device
01	
02	
03	
04	
05	
06	
07	
08	
09	
10	
11	
12	
13	
14	
15	
16	
17	
18	
19	
20	
21	
22	
23	
24	
25	
26	
27	
28	
29	
30	
31	

Other ID list

➡ Enter your assignment of IDs to devices in the following table.

Date:

ID	Device
01	
02	
03	
04	
05	
06	
07	
08	
09	
10	
11	
12	
13	
14	
15	
16	
17	
18	
19	
20	
21	
22	
23	
24	
25	
26	
27	
28	
29	
30	
31	

EN

Other ID list

➡ Enter your assignment of IDs to devices in the following table.

Date:

ID	Device
01	
02	
03	
04	
05	
06	
07	
08	
09	
10	
11	
12	
13	
14	
15	
16	
17	
18	
19	
20	
21	
22	
23	
24	
25	
26	
27	
28	
29	
30	
31	

iFerm Nano

Top

Terminal

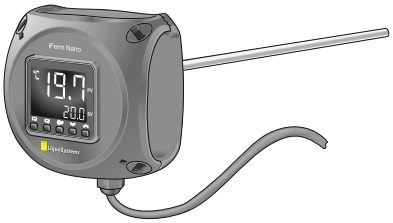

Tank

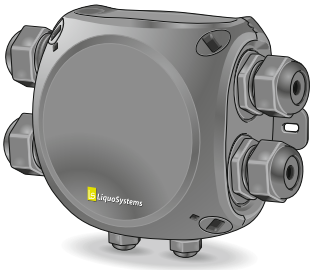

Box

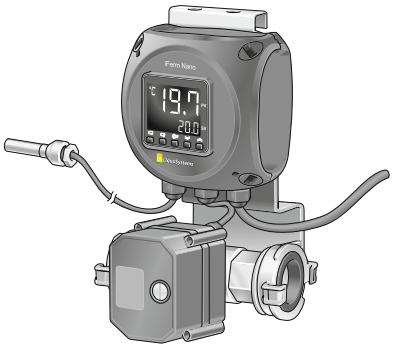

Solo

Switch

LiquoSystems®
Wir regeln Zukunft!

LiquoSystems GmbH

Wilhelmstraße 45 | 74366 Kirchheim/Neckar, Germany
Tel.: +49 7143 891050 | Fax: +49 7143 92868
info@liquosystems.de | www.liquosystems.de

2018-01 | iFerm Nano Terminal